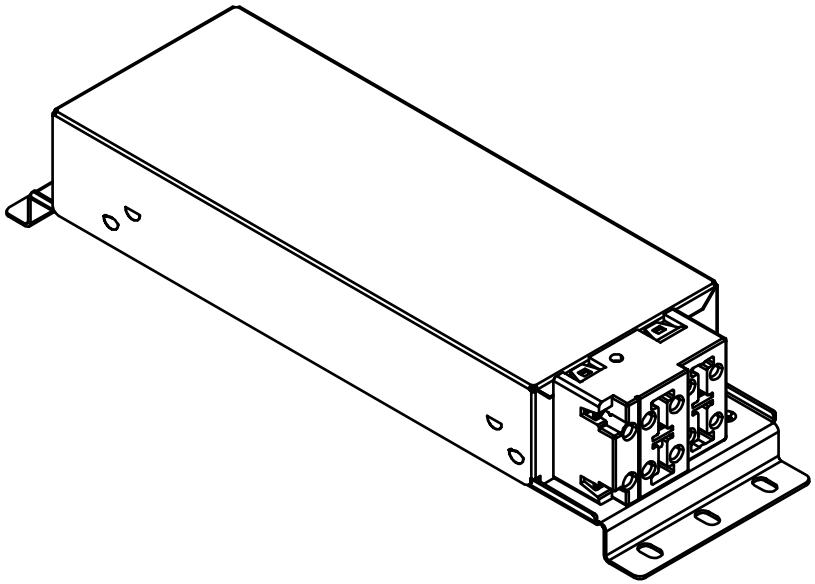DL-YP100/DL-YP101/DL-YP102